A Novel Approach for the Modeling and Control of Timed Event Graphs with Partial Synchronization ⋆

Germano Schafaschek * **Laurent Hardouin** ** **Jörg Raisch** *,***

* *Fachgebiet Regelungssysteme, Technische Universität Berlin, Germany (e-mail: [schafaschek,raisch]@control.tu-berlin.de)*
** *Laboratoire Angevin de Recherche en Ingénierie des Systèmes, Université d'Angers, France (e-mail: laurent.hardouin@univ-angers.fr)*
*** *Science of Intelligence, DFG Research Cluster of Excellence, Berlin, Germany*

Abstract: Timed event graphs (TEGs) are a subclass of timed Petri nets whose dynamics is governed by standard synchronization, i. e., a transition is enabled to fire a certain time after the firing of some other transition(s) and is never disabled by the firing of other transitions. Partial synchronization (PS) imposes an additional condition: a partially synchronized transition can only fire within certain time windows determined by an external signal. Considering TEGs with PS allows to express time-varying behavior, which is manifested in several scenarios of practical relevance. We propose an original approach to model and control TEGs with PS, developed entirely within the domain of the dioid of counters, on which a well-consolidated control theory is available. Additionally, we show that our method can be combined with recent results and applied to the optimal control of TEGs with both PS and resource-sharing phenomena.

Keywords: Timed event graphs, partial synchronization, just-in-time control, min-plus algebra.

1. INTRODUCTION

Timed event graphs (TEGs) are a subclass of timed Petri nets characterized by the fact that each place has precisely one upstream and one downstream transition and all arcs have weight one. In particular, the former restriction implies that TEGs are not suitable for modeling conflict or choice. They can, however, model certain synchronization and delay phenomena, which are central in, e. g., manufacturing or transportation systems. One advantage of TEGs is the well-known fact that in a suitable mathematical framework, namely an idempotent semiring (or dioid) setting such as the max-plus or the min-plus algebra, their evolution can be described by linear equations (see Baccelli et al. (1992) for a thorough coverage). Based on such linear dioid models, an elaborate control theory has become available, mostly focusing on optimality in a *just-in-time* sense: the aim is to fire all input transitions as late as possible while guaranteeing that the firing of output transitions is not later than specified by a reference signal. In a manufacturing context, for example, the firing of an input and an output transition could correspond respectively to the provisioning of raw material and the completion of a workpiece. In general, a just-in-time policy aims at satisfying customer demands while minimizing internal stocks. For a tutorial introduction to this control framework, the reader may refer to Hardouin et al. (2018).

The conditions for transition firings in TEGs are classically modeled by standard synchronization, i. e., a transition can only fire *after* the firing of certain other transitions, possibly with some delay, and the firing of one transition never disables another. Other forms of synchronization have been investigated in the literature. De Schutter and van den Boom (2003) study soft synchronization, a type of synchronization that can be broken at a certain cost. Another special case is exact synchronization, which dictates that two transitions can only fire simultaneously. *Partial synchronization* (or PS, for short) is introduced by David-Henriet et al. (2013) as an asymmetric form of exact synchronization: transition x_2 can only fire *at the same time* as another transition x_1, whereas the firing of x_1 is not affected by that of x_2. Trunk et al. (2020) focus on periodic PS, where the time instants at which a partially synchronized transition can fire are defined by an external periodic signal. Here, we consider a similar setting but make it more general by dropping the periodicity assumption. A scenario in which PS is typically manifested is a road intersection, where a vehicle can only cross while the traffic light is green. As the minimum waiting time of vehicles at the intersection depends on their time of arrival, this clearly describes a time-varying behavior, which cannot be expressed by standard TEGs. Therefore, the class of systems investigated in this contribution is more general than the subclass of TEGs.

In this paper, an original perspective to tackle the modeling and control of TEGs with PS is proposed. We argue that it is possible to look at the "right to fire" of a partially synchronized transition x_i as a resource whose availability

⋆ Support from Deutsche Forschungsgemeinschaft (DFG, German Research Foundation) via grant RA 516/14-1 and under Germany's Excellence Strategy – EXC 2002/1 "Science of Intelligence" – project number 390523135 is gratefully acknowledged.

is managed so as to impose the pertinent restrictions. More specifically, this emulated resource is made available for the system during the time windows within which x_i is allowed to fire, and unavailable otherwise. It is then possible to model the PS phenomenon by a structure similar to that of TEGs with resource sharing. Employing this modeling technique, we develop a method for the optimal control of TEGs with PS by reformulating recent results on the control of TEGs with resource sharing (Moradi et al. (2017); Schafaschek et al. (2020)).

We claim that our approach is simpler and requires the introduction of fewer new mathematical tools than existing ones while retaining the same modeling and control capabilities. Moreover, it can be readily applied to systems exhibiting both PS and resource-sharing phenomena, which is not the case for previous related work.

The paper is organized as follows. Section 2 summarizes relevant facts on idempotent semirings. In Section 3, the modeling of TEGs with PS is discussed. A method for the optimal control of TEGs with PS is proposed in Section 4, and in Section 5 we show how it can be combined with results on TEGs with resource sharing to compute optimal control for systems exhibiting both phenomena. In Section 6, an illustrative case study is solved, and Section 7 presents our conclusions and final remarks.

2. PRELIMINARIES

The purpose of this section is to make the paper largely self-contained. We present a summary of some basic definitions and results on idempotent semirings and timed event graphs — for an exhaustive discussion, the reader may refer to Baccelli et al. (1992) — and touch on some topics from residuation theory and control of TEGs (see Blyth and Janowitz (1972) and Hardouin et al. (2018)).

2.1 Idempotent semirings

An *idempotent semiring* (or *dioid*) $\mathcal{D}$ is a set endowed with two binary operations, denoted $\oplus$ (*sum*) and $\otimes$ (*product*), such that: $\oplus$ is associative, commutative, idempotent (i.e., $(\forall a \in \mathcal{D})\, a \oplus a = a$), and has a neutral (*zero*) element, denoted ε; $\otimes$ is associative, distributes over $\oplus$, and has a neutral (*unit*) element, denoted e; the element ε is absorbing for $\otimes$ (i.e., $(\forall a \in \mathcal{D})\, a \otimes \varepsilon = \varepsilon$). As in conventional algebra, the product symbol $\otimes$ is often omitted. Throughout this paper, we assume that the product has precedence over all other operations in a dioid. More precisely, for any operator $\circledast$ on $\mathcal{D}$ and for all $a, b, c, d \in \mathcal{D}$, an expression like $ab \circledast cd$ means $(a \otimes b) \circledast (c \otimes d)$. An order relation can be defined over $\mathcal{D}$ by

$$(\forall a, b \in \mathcal{D})\ a \preceq b \Leftrightarrow a \oplus b = b\,. \tag{1}$$

Note that ε is the bottom element of $\mathcal{D}$, as $(\forall a \in \mathcal{D})\, \varepsilon \preceq a$.

An idempotent semiring $\mathcal{D}$ is *complete* if it is closed for infinite sums and if the product distributes over infinite sums. For a complete idempotent semiring, the top element is defined as $\top = \bigoplus_{x \in \mathcal{D}} x$, and the *greatest lower bound* operation, denoted $\wedge$, by

$$(\forall a, b \in \mathcal{D})\ a \wedge b = \bigoplus_{x \preceq a, x \preceq b} x\,.$$

$\wedge$ is associative, commutative, and idempotent, and we have $a \oplus b = b \Leftrightarrow a \preceq b \Leftrightarrow a \wedge b = a$.

The set $\overline{\mathbb{Z}} \stackrel{\text{def}}{=} \mathbb{Z} \cup \{-\infty, +\infty\}$, with the *minimum* operation as $\oplus$ and conventional addition as $\otimes$, forms a complete idempotent semiring called *min-plus algebra*, denoted $\overline{\mathbb{Z}}_{\min}$, in which $\varepsilon = +\infty$, $e = 0$, and $\top = -\infty$. Note that in $\overline{\mathbb{Z}}_{\min}$ we have $2 \oplus 5 = 2$, so $5 \preceq 2$; the order is reversed with respect to the conventional order over $\mathbb{Z}$.

Remark 1. (Baccelli et al. (1992)) The set of $n{\times}n$-matrices with entries in a complete idempotent semiring $\mathcal{D}$, endowed with sum and product operations defined by $(A \oplus B)_{ij} = A_{ij} \oplus B_{ij}$, $(A \otimes B)_{ij} = \bigoplus_{k=1}^{n} (A_{ik} \otimes B_{kj})$, for all $i, j \in \{1, \ldots, n\}$, forms a complete idempotent semiring, denoted $\mathcal{D}^{n \times n}$. Its unit element (or identity matrix) is the $n \times n$-matrix with entries equal to e on the diagonal and ε elsewhere; the zero (resp. top) element is the $n \times n$-matrix with all entries equal to ε (resp. $\top$). The definition of order (1) implies, for any $A, B \in \mathcal{D}^{n \times n}$, $A \preceq B \Leftrightarrow (\forall\, i, j \in \{1, \ldots, n\})\, A_{ij} \preceq B_{ij}$. It is possible to deal with nonsquare matrices in this context by suitably padding them with ε-rows or columns; this is done only implicitly, as it does not interfere with the relevant parts of the results of operations between matrices. ◇

A mapping $\Pi : \mathcal{D} \to \mathcal{C}$, with $\mathcal{D}$ and $\mathcal{C}$ two idempotent semirings, is *isotone* if $(\forall a, b \in \mathcal{D})\, a \preceq b \Rightarrow \Pi(a) \preceq \Pi(b)$.

Remark 2. The composition of two isotone mappings is isotone. ◇

Remark 3. Let Π be an isotone mapping over a complete idempotent semiring $\mathcal{D}$, and let $\mathcal{Y} = \{x \in \mathcal{D} \,|\, \Pi(x) = x\}$ be the set of fixed points of Π. It follows that $\bigoplus_{y \in \mathcal{Y}} y$ is the greatest fixed point of Π. ◇

Algorithms exist which allow to compute the greatest fixed points of isotone mappings over complete idempotent semirings. In particular, the algorithm presented in Hardouin et al. (2018) is applicable to the relevant mappings considered in this paper.

In a complete idempotent semiring $\mathcal{D}$, the Kleene star operator on $a \in \mathcal{D}$ is defined as $a^* = \bigoplus_{i \geq 0} a^i$, with $a^0 = e$.

Remark 4. (Baccelli et al. (1992)) The implicit equation $x = ax \oplus b$ over a complete idempotent semiring admits $x = a^* b$ as least solution. This applies, in particular, in the case $x, b \in \mathcal{D}^n$ and $a \in \mathcal{D}^{n \times n}$ (cf. Remark 1). ◇

2.2 Semirings of formal power series

Let $s = \{s(t)\}_{t \in \overline{\mathbb{Z}}}$ be a sequence over $\overline{\mathbb{Z}}_{\min}$. The δ-*transform* of s is a formal power series in δ with coefficients in $\overline{\mathbb{Z}}_{\min}$ and exponents in $\overline{\mathbb{Z}}$, defined by

$$s = \bigoplus_{t \in \overline{\mathbb{Z}}} s(t) \delta^t\,.$$

We denote both the sequence and its δ-transform by the same symbol, as no ambiguity will occur. The set of formal power series in δ with coefficients in $\overline{\mathbb{Z}}_{\min}$ and exponents in $\overline{\mathbb{Z}}$, with addition and multiplication defined by

$$s \oplus s' = \bigoplus_{t \in \overline{\mathbb{Z}}} (s(t) \oplus s'(t)) \delta^t\,,$$

$$s \otimes s' = \bigoplus_{t \in \overline{\mathbb{Z}}} \Big(\bigoplus_{\tau \in \overline{\mathbb{Z}}} (s(\tau) \otimes s'(t - \tau)) \Big) \delta^t\,,$$

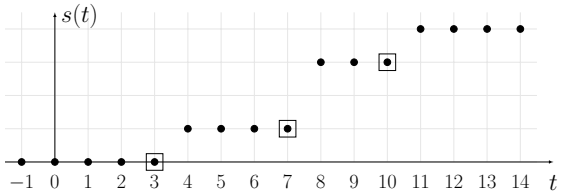

Fig. 1. Counter $s = e\delta^3 \oplus 1\delta^7 \oplus 3\delta^{10} \oplus 4\delta^{+\infty}$.

is a complete idempotent semiring, denoted $\overline{\mathbb{Z}}_{\min}[\![\delta]\!]$. Note that the order in $\overline{\mathbb{Z}}_{\min}[\![\delta]\!]$ is induced by the order in $\overline{\mathbb{Z}}_{\min}$, i. e., $s \preceq s' \Leftrightarrow (\forall t \in \overline{\mathbb{Z}})\, s(t) \preceq s'(t)$.

In this paper, each term $s(t)$ of a sequence will refer to the accumulated number of firings of a certain transition up to and including time t. Naturally, this interpretation carries over to the terms of a series corresponding to the δ-transform of such a sequence. A series s thus obtained is clearly nonincreasing (in the order of $\overline{\mathbb{Z}}_{\min}$, which, as pointed out before, is the reverse of the standard order of $\mathbb{Z}$), meaning $s(t-1) \succeq s(t)$ for all t. We will henceforth refer to such series as *counters*.

The set of counters (i. e., nonincreasing power series) in $\overline{\mathbb{Z}}_{\min}[\![\delta]\!]$ is a complete idempotent semiring, named $\overline{\mathbb{Z}}_{\min,\delta}[\![\delta]\!]$, with zero element s_ε given by $s_\varepsilon(t) = \varepsilon$ for all t, unit element s_e given by $s_e(t) = e$ for $t \le 0$ and $s_e(t) = \varepsilon$ for $t > 0$, and top element $s_\top$ given by $s_\top(t) = \top$ for all t. We will denote this semiring by Σ, for brevity.

Counters can be represented compactly by omitting terms $s(t)\delta^t$ whenever $s(t) = s(t+1)$. For example, a counter s with $s(t) = e$ for $t \le 3$, $s(t) = 1$ for $4 \le t \le 7$, $s(t) = 3$ for $8 \le t \le 10$, and $s(t) = 4$ for $t \ge 11$ can be written $s = e\delta^3 \oplus 1\delta^7 \oplus 3\delta^{10} \oplus 4\delta^{+\infty}$. This is illustrated in Fig. 1, where the squares indicate the terms appearing in the compact notation. It is also common to omit terms with ε-coefficients. For instance, for any $\tau \in \overline{\mathbb{Z}}$, the counter with coefficients equal to e for $t \le \tau$ and ε for $t > \tau$ is simply denoted by $e\delta^\tau$; in particular, with $\tau > 0$, for any $s \in \Sigma$ we have

$$\begin{aligned}(s \otimes e\delta^\tau)(t) &= \bigoplus_{t' \ge t-\tau} s(t') \otimes e \;\oplus\; \bigoplus_{t' < t-\tau} s(t') \otimes \varepsilon \\ &= \bigoplus_{t' \ge t-\tau} s(t') \\ &= s(t-\tau) \qquad \text{(as } s \text{ is nonincreasing)}\end{aligned}$$

for all $t \in \overline{\mathbb{Z}}$, i. e., multiplication by $e\delta^\tau$ can be seen as a backward shift operation by τ time units.

2.3 TEG models in idempotent semirings

Timed event graphs (TEGs) are timed Petri nets in which each place has exactly one upstream and one downstream transition and all arcs have weight 1. With each place p is associated a *holding time*, representing the minimum time every token needs to spend in p before it can contribute to the firing of its downstream transition. In a TEG, we can distinguish input transitions (those that are not affected by the firing of other transitions), output transitions (those that do not affect the firing of other transitions), and internal transitions (those that are neither input nor output transitions). In this paper, we will limit our discussion to SISO TEGs, i. e., TEGs with only one input and one output transition, which we denote respectively by u and y; internal transitions are denoted by x_i. An example of a SISO TEG is shown in Fig. 2.

A TEG is said to be operating under the *earliest firing rule* if every internal and output transition fires as soon as it is enabled.

With each transition x_i, we associate a sequence $\{x_i(t)\}_{t\in\overline{\mathbb{Z}}}$, for simplicity denoted by the same symbol, where $x_i(t)$ represents the accumulated number of firings of x_i up to and including time t. Similarly, we associate sequences $\{u(t)\}_{t\in\overline{\mathbb{Z}}}$ and $\{y(t)\}_{t\in\overline{\mathbb{Z}}}$ with transitions u and y, respectively. By inspection of Fig. 2, one can see that, at any time t, $x_1(t)$ cannot exceed the minimum between $u(t)$ and $x_2(t-2)+2$. This can be expressed in $\overline{\mathbb{Z}}_{\min}$ as

$$(\forall t \in \overline{\mathbb{Z}}) \;\; x_1(t) \succeq u(t) \oplus 2x_2(t-2)\,. \tag{2}$$

Under the earliest firing rule, (2) turns into equality and, through the δ-transform, can be written in Σ as

$$x_1 = u \oplus 2\delta^2 x_2\,.$$

We can obtain similar relations for x_2 and y and, defining the vector $x = \left[\begin{smallmatrix} x_1 \\ x_2 \end{smallmatrix}\right]$, write

$$x = \begin{bmatrix} s_\varepsilon & 2\delta^2 \\ e\delta^3 & s_\varepsilon \end{bmatrix} x \oplus \begin{bmatrix} e\delta^0 \\ s_\varepsilon \end{bmatrix} u\,, \qquad y = \begin{bmatrix} s_\varepsilon & e\delta^0 \end{bmatrix} x\,.$$

In general, a TEG can be described by implicit equations over Σ of the form

$$x = Ax \oplus Bu\,, \qquad y = Cx\,. \tag{3}$$

From Remark 4, the least solution of (3) is given by

$$x = A^*Bu \qquad \text{and} \qquad y = CA^*Bu\,, \tag{4}$$

where $G = CA^*B$ is often called the *transfer function* of the system. For instance, for the system from Fig. 2 we obtain the transfer function $G = e\delta^3(2\delta^5)^*$.

2.4 Residuation theory

Residuation theory provides, under certain conditions, greatest solutions to inequalities such as $f(x) \preceq b$.

Definition 5. An isotone mapping $f : \mathcal{D} \to \mathcal{C}$, with $\mathcal{D}$ and $\mathcal{C}$ complete idempotent semirings, is said to be residuated if for all $y \in \mathcal{C}$ there exists a greatest solution to the inequality $f(x) \preceq y$. This greatest solution is denoted $f^\sharp(y)$, and the mapping $f^\sharp : \mathcal{C} \to \mathcal{D}$, $y \mapsto \bigoplus\{x \in \mathcal{D} \mid f(x) \preceq y\}$, is called the *residual* of f. ◇

Note that, if equality $f(x) = y$ is solvable, $f^\sharp(y)$ yields its greatest solution.

Remark 6. For $a \in \mathcal{D}$, mapping $L_a : \mathcal{D} \to \mathcal{D}$, $x \mapsto a \otimes x$, is residuated; its residual is denoted by $L_a^\sharp(y) = a \mathbin{\backslash\!\!\!\backslash} y$ ($\mathbin{\backslash\!\!\!\backslash}$ is the "left-division" operator). ◇

2.5 Optimal control of TEGs

Assume that a TEG to be controlled is modeled by equations (3) and that an output-reference $z \in \Sigma$ is given. Under the just-in-time paradigm, we aim at firing the input transition u the least possible number of times while guaranteeing that the output transition y fires, by each time instant, at least as many times as specified by z. In other words, we seek the greatest (in the order of $\overline{\mathbb{Z}}_{\min}$) u such that $y = G \otimes u \preceq z$. Based on (4) and Remark 6, the solution is directly obtained by

$$u_{\text{opt}} = G \mathbin{\backslash\!\!\!\backslash} z\,. \tag{5}$$

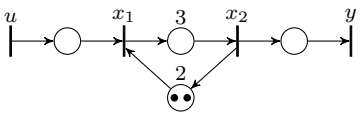

Fig. 2. A SISO TEG, with input u and output y.

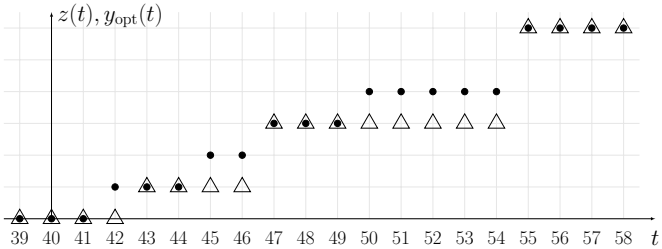

Fig. 3. Tracking of the reference (△) by the output (•) in Example 7.

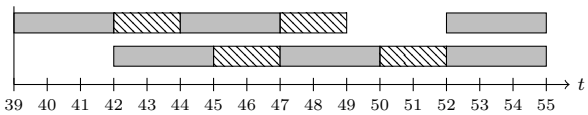

Fig. 4. Optimal schedule obtained in Example 7.

Example 7. For the TEG from Fig. 2, suppose it is required that the accumulated number of firings of y be e $(= 0)$ for $t \leq 42$, 1 for $43 \leq t \leq 46$, 3 for $47 \leq t \leq 54$, and 6 for $t \geq 55$. This is represented by the output-reference $z = e\delta^{42} \oplus 1\delta^{46} \oplus 3\delta^{54} \oplus 6\delta^{+\infty}$. Applying (5), we get the just-in-time input $u_{\text{opt}} = e\delta^{38} \oplus 1\delta^{41} \oplus 2\delta^{43} \oplus 3\delta^{46} \oplus 4\delta^{51} \oplus 6\delta^{+\infty}$, and the corresponding optimal output is $y_{\text{opt}} = G \otimes u_{\text{opt}} = e\delta^{41} \oplus 1\delta^{44} \oplus 2\delta^{46} \oplus 3\delta^{49} \oplus 4\delta^{54} \oplus 6\delta^{+\infty}$. One can easily verify that indeed $y_{\text{opt}} \preceq z$, as illustrated in Fig. 3. The optimal schedules obtained above can be displayed in a chart as shown in Fig. 4, where the start and end points of the gray bars represent the firings of transitions u and y (which, in this case, coincide with those of x_1 and x_2), respectively; the dashed bars are the minimum delays imposed by the bottom place between the firings of x_2 and x_1 (and hence also between y and u). ◇

3. MODELING OF TEGS WITH PARTIAL SYNCHRONIZATION

The behavior of TEGs with PS cannot be directly modeled by equations like (3). In this section, we propose a way to express PS in the context of counters with the help of the Hadamard product.

3.1 The concept of partial synchronization

A general way of looking at the partial synchronization phenomenon is the following: the firings of a TEG's partially synchronized (internal) transition x_i are subject to a predefined synchronizing signal $\mathcal{S} : \overline{\mathbb{Z}} \to \mathbb{Z}^+_{\min}$, where $\mathbb{Z}^+_{\min} \stackrel{\text{def}}{=} \{a \in \overline{\mathbb{Z}}_{\min} \,|\, \varepsilon \prec a \preceq e\} \subset \overline{\mathbb{Z}}_{\min}$ is the set of finite nonnegative (in the standard sense) elements of $\overline{\mathbb{Z}}_{\min}$. More precisely, an additional condition for the firing of x_i — besides the ones from standard synchronization as expressed in (3) — is imposed; namely, at any time $t \in \overline{\mathbb{Z}}$, x_i can only fire if $\mathcal{S}(t) \neq e$, in which case it can fire at most $\mathcal{S}(t)$ times. If $\mathcal{S}(t) = e$, x_i is not allowed to fire at time t. Note that limiting $\mathcal{S}$ to only assume finite values is not restrictive, as they can be arbitrarily large. In terms of a counter representation, this condition on x_i reads as

$$(\forall t \in \overline{\mathbb{Z}}) \quad x_i(t) \succeq \mathcal{S}(t) \otimes x_i(t-1)\,. \tag{6}$$

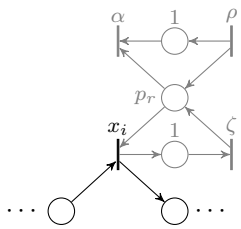

Fig. 5. Appended structure (in gray) to represent PS of internal transition x_i in a TEG.

Signal $\mathcal{S}$ as above defines a sequence $\{\mathcal{S}(t)\}_{t \in \overline{\mathbb{Z}}}$. It should be clear, however, that the δ-transform of such a sequence is, in general, not a counter, as its values are not necessarily nonincreasing (in the order of $\overline{\mathbb{Z}}_{\min}$). In fact, it is not possible to express a condition on x_i equivalent to (6) only in terms of counters and the operations introduced so far. In the sequel, we present a way to capture the effects of PS within the domain of Σ.

3.2 Modeling partial synchronization over TEGs

We now propose an alternative perspective to model PS in TEGs. The method consists in appending to any partially synchronized transition x_i the structure shown in Fig. 5. At any given time t, the number of tokens in place p_r corresponds to how many firings PS allows for x_i at t. For this to correctly represent the restrictions on x_i due to PS, we need to manage the number of tokens in p_r accordingly, which is made possible by assigning appropriate firing schedules to transitions ρ and α. Suppose x_i is to be conceded k firings at time t. Then, ρ will fire k times at t, inserting k tokens in p_r. These will remain available for only one time unit, during which they enable up to k firings of x_i. Note that the number of tokens inserted in p_r provides only an upper bound to the number of times x_i can fire at time t, but it is not known a priori how many firings (if any) x_i will actually perform. The role of transition ζ is to make the mechanism independent of how often x_i fires by returning to p_r at time $t+1$ all the tokens consumed by x_i at t. In fact, as the earliest firing rule is assumed, based on Fig. 5 we have $\zeta(t) = x_i(t-1)$ for all $t \in \overline{\mathbb{Z}}$ (or simply $\zeta = e\delta^1 \otimes x_i$). Then, at time $t+1$, x_i's "right to fire" is revoked, which is carried out by scheduling k firings for α so that p_r becomes empty. Formally, $\alpha = e\delta^1 \otimes \rho$. In order to avoid any (nondeterministic) dispute between α and x_i for the tokens residing in p_r at $t+1$, the final touch is to assume that α has higher priority than x_i, meaning the firing schedule of x_i must be determined under the hard restriction that it cannot interfere with that of α. The described mechanism is initialized as follows: if x_i is first granted the right to fire at time τ, define $\rho(t) = e$ for all $t < \tau$.

Example 8. Consider the TEG from Fig. 2 and suppose transition x_1 is partially synchronized, with the following restrictions: it may fire twice at times $t \in \{28, 40, 52\}$ and once at times $t \in \{34, 46, 58\}$, and cannot fire at all at any other instant t. This PS is modeled through the structure described above, as shown in Fig. 6, with

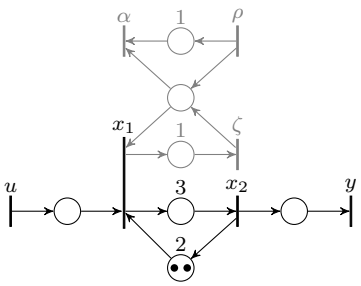

Fig. 6. TEG from Fig. 2 with x_1 under PS.

$\rho = e\delta^{27} \oplus 2\delta^{33} \oplus 3\delta^{39} \oplus 5\delta^{45} \oplus 6\delta^{51} \oplus 8\delta^{57} \oplus 9\delta^{+\infty}$. The schedule for α is then determined as $\alpha = e\delta^1 \otimes \rho$, i. e., by shifting that of ρ backwards by one time unit. ◇

Note that this method naturally applies to the case of a TEG with multiple transitions under PS by appending an independent structure like the one from Fig. 5 to each partially-synchronized transition.

It should be clear that the overall system resulting from the method described above is no longer a TEG, as place p_r has two upstream and two downstream transitions. As a consequence, it cannot be modeled by linear equations such as (3). In order to capture the restrictions imposed by PS on a transition x_i, we need to be able to express the relationship among transitions (and corresponding counters) ρ, α, x_i, and ζ. For this, the *Hadamard product* of counters is used.

Definition 9. (Hardouin et al. (2008)) The Hadamard product of $s_1, s_2 \in \Sigma$, written $s_1 \odot s_2$, is the counter defined as follows:

$$(\forall t \in \overline{\mathbb{Z}}) \;\; (s_1 \odot s_2)(t) = s_1(t) \otimes s_2(t)\,. \qquad \diamond$$

This operation is associative, commutative, distributes over $\oplus$ and $\wedge$, has neutral element $e\delta^{+\infty}$, and s_ε is absorbing for it (i. e., $(\forall s \in \Sigma)\; s \odot s_\varepsilon = s_\varepsilon$).

The Hadamard product amounts to the coefficient-wise standard sum of counters. From the structure of Fig. 5 one can see that, at any time instant t, the combined accumulated number of firings of α and x_i cannot exceed (in the conventional sense) that of ρ and ζ. The Hadamard product allows us to translate this into the following condition:

$$\rho \odot \zeta \;\preceq\; \alpha \odot x_i\,. \tag{7}$$

With ρ, α, and ζ defined as described in this section, inequality (7) fully captures the restrictions imposed by PS on a transition x_i.

The structure from Fig. 5 shows a close correspondence to that of a prioritized resource-sharing phenomenon (see Moradi et al. (2017)). The TEG in question (together with the added transition ζ) and the "resource manager" (implemented by transitions ρ and α) play the roles of a lower- and a higher-priority user, respectively, and the disputed resource is represented by place p_r. An advantage of establishing this parallel is that it will allow us to tackle the problem of optimally controlling TEGs with PS (Section 4) by reformulating recent results on TEGs with resource sharing.

Remark 10. The formulation presented in this section does not entail any loss of generality with respect to that of Section 3.1. If transition x_i is partially synchronized based on a synchronizing signal $\mathcal{S}$, the structure of Fig. 5 can be adopted to implement the same PS for x_i by defining, for all $t \in \overline{\mathbb{Z}}$, $\rho(t) = \bigotimes_{\tau \le t} \mathcal{S}(\tau)$. Hence, the accumulated number of firings of ρ by any time t is equal to the total number of firings of x_i allowed by $\mathcal{S}$ up to t. Recall that α is then automatically defined as $\alpha = e\delta^1 \otimes \rho$. ◇

4. OPTIMAL CONTROL OF TEGS WITH PARTIAL SYNCHRONIZATION

We now propose a method for the optimal (just-in-time) control of TEGs with PS. To make the discussion simpler, we start by considering the case of a single partially synchronized transition (Section 4.1) and then proceed to generalize to the case of multiple partially synchronized transitions (Section 4.2).

4.1 The case of a single transition under PS

Consider a TEG modeled by linear equations (3), and suppose one of its internal transitions, x_i, is partially synchronized. We represent the PS phenomenon through the structure shown in Fig. 5, as discussed in Section 3.2. Recall that this implies counters ρ and $\alpha = e\delta^1 \otimes \rho$ are predetermined. Given an output reference z, our objective is to obtain the optimal input $\hat{u}_{\text{opt}}$ which leads to tracking the reference as closely as possible while respecting the partial synchronization of x_i described by ρ, i. e., we seek the largest u such that $y = G \otimes u \preceq z$ and (7) holds. Such an input leads to a just-in-time behavior throughout the system.

Let us set out by noting that, as (4) describes the behavior of the TEG operating under the earliest firing rule, for an arbitrary input $u \in \Sigma$, the schedule of all internal transitions can be uniquely determined through matrix $A^*B \in \Sigma^{n\times 1}$, where n is the number of internal transitions in the TEG. Denoting the ith entry of A^*B by $\mathcal{H}_i$, we have $x_i = \mathcal{H}_i u$. Applying this to (7), together with the fact that $\zeta = e\delta^1 x_i$ and $\alpha = e\delta^1\rho$ (cf. Section 3.2), we can write

$$\rho \odot e\delta^1 \mathcal{H}_i u \;\preceq\; e\delta^1\rho \odot \mathcal{H}_i u\,. \tag{8}$$

At this point, the following result comes in handy.

Proposition 11. (Hardouin et al. (2008)) For any $a \in \Sigma$, the mapping $\Pi_a : \Sigma \to \Sigma$, $x \mapsto a \odot x$, is residuated. For any $b \in \Sigma$, $\Pi_a^\sharp(b)$, denoted $b \odot^\sharp a$, is the greatest $x \in \Sigma$ such that $a \odot x \preceq b$. ◇

From Proposition 11, (8) is equivalent to

$$e\delta^1 \mathcal{H}_i u \;\preceq\; (e\delta^1\rho \odot \mathcal{H}_i u) \odot^\sharp \rho\,,$$

which, in turn, is equivalent to (cf. Remark 6)

$$u \;\preceq\; e\delta^1 \mathcal{H}_i \phi\big[(e\delta^1\rho \odot \mathcal{H}_i u) \odot^\sharp \rho\big]\,. \tag{9}$$

Finding an input which leads to tracking the reference while respecting (7) thus amounts to simultaneously solving $u \preceq G\phi z$ and (9), i. e., solving

$$u \;\preceq\; e\delta^1 \mathcal{H}_i \phi\big[(e\delta^1\rho \odot \mathcal{H}_i u) \odot^\sharp \rho\big] \;\wedge\; G\phi z\,. \tag{10}$$

Since for any $s_1, s_2 \in \Sigma$ it holds that $s_1 \preceq s_2 \Leftrightarrow s_1 = s_1 \wedge s_2$, one can see that (10) is equivalent to

$$u \;=\; e\delta^1 \mathcal{H}_i \phi\big[(e\delta^1\rho \odot \mathcal{H}_i u) \odot^\sharp \rho\big] \;\wedge\; G\phi z \;\wedge\; u\,.$$

The optimal input $\hat{u}_{\text{opt}}$ is, therefore, the greatest fixed point of the mapping $\Phi : \Sigma \to \Sigma$,

$$\Phi(u) \;=\; e\delta^1 \mathcal{H}_i \phi\big[(e\delta^1\rho \odot \mathcal{H}_i u) \odot^\sharp \rho\big] \;\wedge\; G\phi z \;\wedge\; u\,.$$

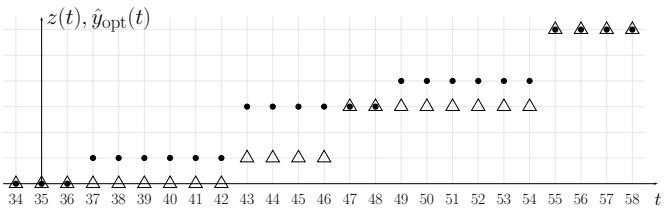

Fig. 7. Tracking of the reference (△) by the output (•) under PS as in Example 12.

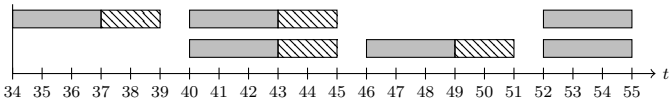

Fig. 8. Optimal schedule under PS obtained in Example 12.

Notice that Φ consists in a succession of order-preserving operations (product $\otimes$, Hadamard product $\odot$ and its residual $\odot^\sharp$, left-division $\oslash$, and infimum $\wedge$), which, in turn, can be seen as the composition of corresponding isotone mappings (for instance, following the notation of Proposition 11, $s_1 \odot s_2$ corresponds to $\Pi_{s_1}(s_2)$, and similarly for the other operations). Therefore, according to Remark 2, Φ is also isotone; Remark 3 then ensures the existence of its greatest fixed point, which yields the desired optimal solution.

Example 12. Let us revisit Example 7, only now with transition x_1 partially synchronized as in Example 8. For the TEG from Fig. 2, we have $\mathcal{H}_1 = (2\delta^5)^*$. With ρ and α defined as in Example 8, we compute the greatest fixed point of mapping Φ to get $\hat{u}_{\text{opt}} = e\delta^{33} \oplus 1\delta^{39} \oplus 3\delta^{45} \oplus 4\delta^{51} \oplus 6\delta^{+\infty}$. The corresponding optimal output is $\hat{y}_{\text{opt}} = G \otimes \hat{u}_{\text{opt}} = e\delta^{36} \oplus 1\delta^{42} \oplus 3\delta^{48} \oplus 4\delta^{54} \oplus 6\delta^{+\infty}$. The resulting reference tracking is illustrated in Fig. 7; as expected, performance is clearly degraded due to the additional restrictions imposed by PS, meaning the reference cannot be tracked as closely as in the case without PS (compare with Fig. 3). The obtained optimal schedule is shown in Fig. 8, to be interpreted as in Example 7. ◇

4.2 The case of multiple transitions under PS

The case of a TEG with multiple partially synchronized transitions $x_j, j \in \{1, \ldots, J\}$, can be dealt with in a similar way. We again represent the partial synchronization of each x_j by a structure like the one from Fig. 5, only indexing transitions ρ_j, α_j, and ζ_j accordingly. Besides tracking reference z as closely as possible, the optimal input must now be computed ensuring, by analogy with (7), that

$$\rho_j \odot \zeta_j \preceq \alpha_j \odot x_j \tag{11}$$

is respected for all $j \in \{1, \ldots, J\}$. As argued in Section 4.1, (11) is equivalent to

$$u \preceq e\delta^1 \mathcal{H}_j \oslash \big[(e\delta^1 \rho_j \odot \mathcal{H}_j u) \odot^\sharp \rho_j\big] , \tag{12}$$

where $\mathcal{H}_j$ is the jth entry of A^*B as in (4), i. e., $x_j = \mathcal{H}_j \otimes u$. Defining the collection of mappings $\Phi_j : \Sigma \to \Sigma$,

$$\Phi_j(u) = e\delta^1 \mathcal{H}_j \oslash \big[(e\delta^1 \rho_j \odot \mathcal{H}_j u) \odot^\sharp \rho_j\big] ,$$

an input u satisfying (12) simultaneously for all $j \in \{1, \ldots, J\}$ while respecting reference z is such that

$$u \preceq \bigwedge_{j=1}^{J} \Phi_j(u) \qquad \text{and} \qquad u \preceq G \oslash z$$

or, through a reasoning similar to the one put forth in Section 4.1,

$$u = \bigwedge_{j=1}^{J} \Phi_j(u) \ \wedge \ G \oslash z \ \wedge \ u .$$

Hence, the input $\hat{u}_{\text{opt}}$ which optimally tracks the reference while respecting (11) for all $j \in \{1, \ldots, J\}$ is the greatest fixed point of the (isotone) mapping $\overline{\Phi} : \Sigma \to \Sigma$,

$$\overline{\Phi}(u) = \bigwedge_{j=1}^{J} \Phi_j(u) \ \wedge \ G \oslash z \ \wedge \ u .$$

5. OPTIMAL CONTROL OF TEGS WITH PS AND RESOURCE SHARING

In this section, we present a method for the optimal control of systems exhibiting both PS and resource-sharing phenomena [1]. For details on the steps related to TEGs with resource sharing, the reader is invited to consult Moradi et al. (2017); Schafaschek et al. (2020).

Consider a system consisting of TEGs $S^1, \ldots, S^K$ sharing a resource with finite but arbitrary capacity, as shown in Fig. 9. β may, in general, be a TEG (or, in simple cases, just a single place) describing the capacity of the resource as well as the minimum delay between release and allocation events. H^k_{uA}, H^k_{AR}, and H^k_{Ry} represent, respectively, the input-allocation, allocation-release, and release-output dynamics of S^k.

The relationship among the counters related to resource-allocation and release transitions can be expressed, with the help of the Hadamard product, by

$$\beta \otimes \Big(\bigodot_{k=1}^{K} x^k_R \Big) \preceq \bigodot_{k=1}^{K} x^k_A , \tag{13}$$

which is analogous to (7), except that here there is an actual resource with its own dynamics, represented by the term β.

[1] The discussion focuses on the case of a single partially-synchronized transition in each TEG and a single shared resource. Notwithstanding, the method directly carries over to the more general case of TEGs with multiple transitions under PS (based on Section 4.2) and an arbitrary number of shared resources (see Section 4.3 from Schafaschek et al. (2020)).

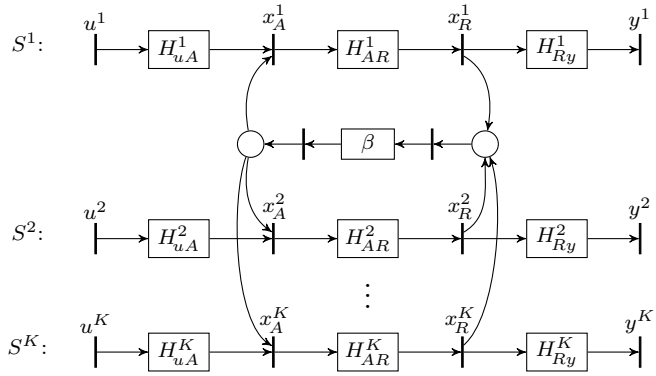

Fig. 9. TEGs $S^1, \ldots, S^K$ with a shared resource β.

Suppose an internal transition x_i^k — which might, in particular, be x_A^k or x_R^k — of each subsystem S^k is partially synchronized. For each such transition, PS is modeled through an independent structure like the one from Fig. 5, as described in Section 3.2, with the appropriate indexing of transitions (and related counters) ρ^k, α^k, and ζ^k. Then, based on (7), each x_i^k is subject to

$$\rho^k \odot \zeta^k \preceq \alpha^k \odot x_i^k \,. \tag{14}$$

Let the input-output behavior of each S^k, including the resource and ignoring all other subsystems, be described by $y^k = G^k u^k$, i. e., G^k is the transfer function of subsystem S^k in the hypothetical case that no other subsystem requires the joint resource. Assume respective output-references z^k are given. It should be clear that, due to the limited capacity of the resource, in general it is not possible for all subsystems to achieve the same just-in-time schedule as in the case without resource sharing. One way to settle the dispute is introducing a priority policy. We henceforth assume, without loss of generality, that the subsystems are indexed according to their priority level, meaning S^k has higher priority than S^{k+1} for all $k \in \{1, \ldots, K-1\}$. The priority policy then dictates that, for each $k \in \{2, \ldots, K\}$ and for all $\ell \in \{1, \ldots, k-1\}$, S^k cannot interfere with the performance of S^ℓ.

Hence, S^1 is free to use the resource at will, and we can compute its optimal input neglecting any dispute with other subsystems. We must, however, take the restrictions due to PS into account. Computing the optimal input for S^1 thus amounts to the case discussed in Section 4.1. Recalling that we have $x_i^1 = \mathcal{H}_i^1 u^1$, where $\mathcal{H}_i^1$ is the ith entry of $A^{1*}B^1$ (cf. (4)), based on (14) we can write

$$\rho^1 \odot e\delta^1 \mathcal{H}_i^1 u^1 \;\preceq\; e\delta^1 \rho^1 \odot \mathcal{H}_i^1 u^1 \,. \tag{15}$$

From Section 4.1, the greatest u^1 satisfying $G^1 u^1 \preceq z^1$ and (15), u^1_{opt}, is the greatest fixed point of $\Psi^1 : \Sigma \to \Sigma$,

$$\Psi^1(u^1) \;=\; e\delta^1 \mathcal{H}_i^1 \oslash \big[(e\delta^1 \rho^1 \odot \mathcal{H}_i^1 u^1) \odot^\sharp \rho^1\big] \;\wedge\; G^1 \oslash z^1 \;\wedge\; u^1 .$$

Denote the corresponding resource-allocation and release schedules by $x^1_{A_{\text{opt}}}$ and $x^1_{R_{\text{opt}}}$, respectively.

For S^2, besides the conditions from PS, we must compute the optimal input u^2_{opt} under the restriction that the optimal behavior of S^1 is unchanged; based on (13), this means we must respect

$$\beta\,(x^1_{R_{\text{opt}}} \odot x^2_R) \;\preceq\; x^1_{A_{\text{opt}}} \odot x^2_A \,. \tag{16}$$

For a just-in-time input u^2, we have $x^2_A = H^2_{uA} u^2$ as well as $x^2_R = H^2_{AR} x^2_A$. Following similar steps as in Section 4.1, we can rewrite (16) as

$$u^2 \;\preceq\; H^2_{AR} H^2_{uA} \oslash \big[\big(\beta \oslash (x^1_{A_{\text{opt}}} \odot H^2_{uA} u^2)\big) \odot^\sharp x^1_{R_{\text{opt}}}\big] \tag{17}$$

and (14), for $k = 2$, as

$$u^2 \;\preceq\; e\delta^1 \mathcal{H}_i^2 \oslash \big[(e\delta^1 \rho^2 \odot \mathcal{H}_i^2 u^2) \odot^\sharp \rho^2\big] \,. \tag{18}$$

The greatest u^2 satisfying $G^2 u^2 \preceq z^2$, (17), and (18) can then be computed as the greatest fixed point of the mapping $\Psi^2 : \Sigma \to \Sigma$,

$$\Psi^2(u^2) \;=\; e\delta^1 \mathcal{H}_i^2 \oslash \big[(e\delta^1 \rho^2 \odot \mathcal{H}_i^2 u^2) \odot^\sharp \rho^2\big] \;\wedge\; G^2 \oslash z^2 \;\wedge\; u^2 \;\wedge\; H^2_{AR} H^2_{uA} \oslash \big[\big(\beta \oslash (x^1_{A_{\text{opt}}} \odot H^2_{uA} u^2)\big) \odot^\sharp x^1_{R_{\text{opt}}}\big].$$

In general, for any S^k, $k \geq 2$, the optimal input u^k_{opt} can be obtained as the greatest fixed point of $\Psi^k : \Sigma \to \Sigma$,

$$\Psi^k(u^k) \;=\; e\delta^1 \mathcal{H}_i^k \oslash \big[(e\delta^1 \rho^k \odot \mathcal{H}_i^k u^k) \odot^\sharp \rho^k\big] \;\wedge\; G^k \oslash z^k \;\wedge\; u^k \;\wedge\; H^k_{AR} H^k_{uA} \oslash \Big[\Big(\beta \oslash \big(\bigodot_{\ell=1}^{k-1} x^\ell_{A_{\text{opt}}} \odot H^k_{uA} u^k\big)\Big) \odot^\sharp \bigodot_{\ell=1}^{k-1} x^\ell_{R_{\text{opt}}}\Big].$$

6. APPLICATION EXAMPLE

To help elucidating the method presented in this paper and illustrate its applicability, we now consider a simple scenario of a manufacturing workcell, modeled in Fig. 10. Three production lines (subsystems S^1, S^2, and S^3) make use of the same machine for certain steps of their processes. Being able to operate on at most two workpieces at a time, this machine can be seen as a shared double-capacity resource, with a minimum cooldown of 1 time unit between consecutive operations. Transitions x^k_A and x^k_R represent the allocation and release of the machine by S^k, $k \in \{1, 2, 3\}$. After leaving this machine, workpieces from S^1 must undergo intensive heat treatment in a furnace. In order to avoid spikes in the energy consumption of the whole shop floor, which e. g. can lead to substantial penalty fees from the electric utility, restrictions are posed for turning on the furnace, which translate into a partial synchronization on transition x^1_{on}. The firing of transitions u^k and y^k represent respectively the arrival of an unprocessed workpiece and the completion of a workpiece in S^k. The transfer functions, considering each respective subsystem with the resource and ignoring all others, are $G^1 = e\delta^{15}(1\delta^{10})^*$, $G^2 = e\delta^4(2\delta^5)^*$, and $G^3 = e\delta^3(2\delta^4)^*$.

Suppose the following demand is received: 4 completed workpieces from S^1 are required by time 53; from S^2, 3 workpieces are required by time 28 and 2 more by time 40; 3 workpieces from S^3 are required by time 10 and 2 more by time 36. In terms of counters, this can be encoded by the output-references

$$z^1 = e\delta^{52} \oplus 4\delta^{+\infty} \,,$$
$$z^2 = e\delta^{27} \oplus 3\delta^{39} \oplus 5\delta^{+\infty} \,,$$
$$z^3 = e\delta^{9} \oplus 3\delta^{35} \oplus 5\delta^{+\infty} \,.$$

Suppose also that the PS due to the restrictions for turning on the furnace dictate that x^1_{on} can only fire at times

$$t \in \mathcal{T} = \{[11, 15] \cup [21, 23] \cup [32, 36] \cup [44, 47]\} \subset \mathbb{Z} \,,$$

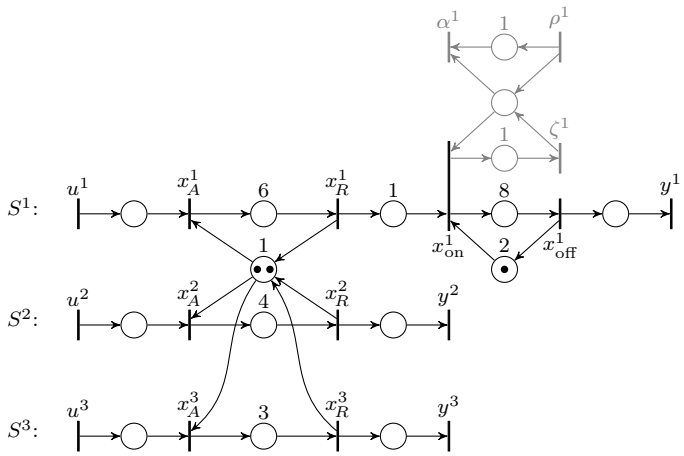

Fig. 10. Model of a simple manufacturing workcell.

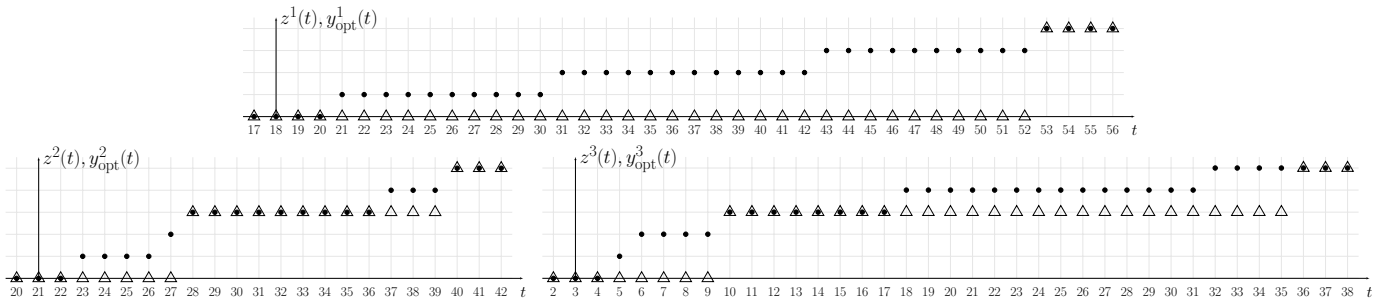

Fig. 11. Tracking of the references z^k ($\triangle$) by the outputs y^k_{opt} ($\bullet$), $k \in \{1, 2, 3\}$, from the example of Section 6.

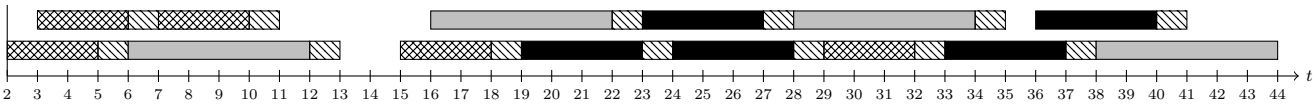

Fig. 12. Optimal schedule obtained in Section 6; the gray, black, and crosshatched bars represent the use of the resource by S^1, S^2, and S^3, respectively, whereas the dashed bars are the delays imposed by the resource.

and at most once at each such instant. As shown in Fig. 10, this PS is modeled by the structure presented in Section 3.2, with

$$\rho^1(t) = \begin{cases} e & \text{if } t \leq 10\,; \\ 1 \otimes \rho^1(t-1) & \text{if } t \in \mathcal{T}\,; \\ \rho^1(t-1) & \text{if } t \notin \mathcal{T} \text{ and } t > 10\,. \end{cases}$$

Following the procedure laid down in Section 5, the greatest fixed points of mappings Ψ^k, $k \in \{1, 2, 3\}$, yield

$$\begin{aligned} u^1_{\text{opt}} &= e\delta^5 \oplus 1\delta^{15} \oplus 2\delta^{27} \oplus 3\delta^{37} \oplus 4\delta^{+\infty}\,, \\ u^2_{\text{opt}} &= e\delta^{18} \oplus 1\delta^{22} \oplus 2\delta^{23} \oplus 3\delta^{32} \oplus 4\delta^{35} \oplus 5\delta^{+\infty}\,, \\ u^3_{\text{opt}} &= e\delta^{1} \oplus 1\delta^{2} \oplus 2\delta^{6} \oplus 3\delta^{14} \oplus 4\delta^{28} \oplus 5\delta^{+\infty}\,. \end{aligned}$$

The resulting optimal outputs are

$$\begin{aligned} y^1_{\text{opt}} &= e\delta^{20} \oplus 1\delta^{30} \oplus 2\delta^{42} \oplus 3\delta^{52} \oplus 4\delta^{+\infty}\,, \\ y^2_{\text{opt}} &= e\delta^{22} \oplus 1\delta^{26} \oplus 2\delta^{27} \oplus 3\delta^{36} \oplus 4\delta^{39} \oplus 5\delta^{+\infty}\,, \\ y^3_{\text{opt}} &= e\delta^{4} \oplus 1\delta^{5} \oplus 2\delta^{9} \oplus 3\delta^{17} \oplus 4\delta^{31} \oplus 5\delta^{+\infty}\,. \end{aligned}$$

Figure 11 shows the tracking of the corresponding references. In Figure 12, the use of the resource is illustrated. One can observe that the operation of S^1 is largely governed by the dynamics of the furnace and the PS on transition x^1_{on}. In particular, as the furnace has single capacity and our method results in a just-in-time behavior, S^1 never allocates two instances of the resource in parallel. This implies the first outputs of S^1 must be much earlier than required by z^1. The schedule of S^2 for using the resource is clearly computed accommodating that of S^1, and both of them, in turn, largely mold the schedule of S^3.

7. CONCLUSION

This paper provides a method for the optimal (just-in-time) control of timed event graphs with partial synchronization, i. e., TEGs in which one or more transitions may be restricted to fire within certain time windows specified by an external signal. We propose a way to model PS entirely within the domain of the dioid of counters. We show that, besides simplicity, this modeling approach brings the advantage of making it possible to tackle the optimal control of systems of TEGs exhibiting both partial synchronization and resource-sharing phenomena. The applicability of the method is illustrated through a practically-motivated example. An intended enhancement is to generalize the results to the case of varying PS, i. e., where the PS restrictions may change over time.

REFERENCES

Baccelli, F., Cohen, G., Olsder, G.J., and Quadrat, J.P. (1992). *Synchronization and Linearity: an Algebra for Discrete Event Systems.* Wiley.

Blyth, T. and Janowitz, M. (1972). *Residuation Theory.* Pergamon press.

David-Henriet, X., Hardouin, L., Raisch, J., and Cottenceau, B. (2013). Optimal control for timed event graphs under partial synchronization. In *52nd IEEE conference on decision and control (CDC).* Firenze, Italy.

De Schutter, B. and van den Boom, T.J.J. (2003). MPC for discrete-event systems with soft and hard synchronization constraints. *International Journal of Control*, 76(1), 82–94.

Hardouin, L., Cottenceau, B., Lagrange, S., and Le Corronc, E. (2008). Performance analysis of linear systems over semiring with additive inputs. In *9th International Workshop on Discrete Event Systems (WODES).* Gothenburg, Sweden.

Hardouin, L., Cottenceau, B., Shang, Y., and Raisch, J. (2018). Control and state estimation for max-plus linear systems. *Foundations and Trends in Systems and Control*, 6(1), 1–116.

Moradi, S., Hardouin, L., and Raisch, J. (2017). Optimal control of a class of timed discrete event systems with shared resources, an approach based on the hadamard product of series in dioids. In *56th IEEE Conference on Decision and Control (CDC).* Melbourne, Australia.

Schafaschek, G., Hardouin, L., and Raisch, J. (2020). Optimal control of timed event graphs with resource sharing and output-reference update. *at – Automatisierungstechnik*, 68(7), 512–528.

Trunk, J., Cottenceau, B., Hardouin, L., and Raisch, J. (2020). Model decomposition of timed event graphs under periodic partial synchronization: application to output reference control. *Discrete Event Dynamic Systems*, 30(4), 605–634.